3nStar
ONE BRAND, ONE SOLUTION

# SC455
# Wireless Handheld Barcode Scanner 2D USB with Base
## Programming Manual

RF433 Wireless | 2D | V1.0

www.3nstar.com

Model No.：SC455

# Contents

**ABOUT THIS MANUAL**.....ERROR! BOOKMARK NOT DEFINED.

**CHAPTER 1 GETTING START**..... **ERROR! BOOKMARK NOT DEFINED.**

1.1RECEIVER..... 5
1.2 CONNECT RECEIVER..... 5
1.3 INSTALL CABLE ..... 5
1.3 SCANNER PAIRING ..... 6

**CHAPTER 2 SCANNING**..... **ERROR! BOOKMARK NOT DEFINED.**

2.1 INTRODUCTION ..... 7
2.2 HANDHELD SCAN MODE..... 8
2.3 AIM..... 8
2.4 DEPTH OF FILED ..... 9

**CHAPTER 3 COMMON FUNSTION SETTING** .. **ERROR! BOOKMARK NOT DEFINED.**

3.1 SCAN MODE ..... 10
3.2 IMAGE REVERE.....11
3.3 ILLUMINATION .....11
3.4 BARCODE SCANNING DELAY .....11

**CHAPTER 4 BARCODE TYPE DEFINITION** .. **ERROR! BOOKMARK NOT DEFINED.**

4.1 COMMON SETTING..... 12
4.2 1D BARCODE ..... 12
4.2.1 Codabar ..... 12
4.2.2 Code 39 ..... 14
4.2.3 Code 128 ..... 16
4.2.4 Code 11..... 16
4.2.5 Code 93 ..... 17

4.2.6 Interleaved 2 of 5 ..... 18
4.2.7 Straight 2 of 5 Industrial ..... 19
4.2.8 Matrix 2 of 5 ..... 20
4.2.9 UPC-A ..... 20
4.2.10 UPC-E ..... 23
4.2.11 EAN-8 ..... 25
4.2.12 EAN-13 ..... 27
4.2.13 MSI ..... 29
4.3 2DBARCODE ..... 31
4.3.1 PDF417 ..... 31
4.3.2 Micro PDF417 ..... 31
4.3.3 QR Code ..... 32
4.3.4 Data Matrix ..... 32
4.3.5 Maxicode ..... 33
4.3.6 Aztec ..... 34
4.3.7 Chinese sensible code ..... 34
APPENDIX：DIGITAL BARCODE ..... 35
APPENDIX 3：RESTORE DEFAULT SETTING ..... **ERROR! BOOKMARK NOT DEFINED.**
CHAPTER 5 WIRELESS CONFIGURATION ..... **ERROR! BOOKMARK NOT DEFINED.**
5.1 TRANSMITTING TERMINAL ..... 39
5.1.1 Enter setting and Save&exit ..... 39
5.1.2 Start pairing ..... 39
5.1.3 Interface setting ..... 40
5.1.4 Wire output turn on ..... 40
5.1.4 HID keyboard language ..... 40
5.1.5 Check parameter ..... 41
5.1.10 Operation mode ..... 41
5.1.11 Inventory mode operation setting ..... 42
5.1.12 Sleep time setting ..... 42
5.1.13 Initialization ..... 42
5.2.1 SET PREFIX ..... 43
5.2.2 SET SUFFIX ..... 43
5.2.3 Notify sound system ..... 44
5.2.4 Instruction system ..... 44
**APPENDIX** ..... **ERROR! BOOKMARK NOT DEFINED.**
APPENDIX1：BARCODE LIST ..... 46
APPENDIX 2：ASCII BARCODE LIST ..... 55

# About this manual

This manual is designed to provide you the common setting, operation and maintenance instructions of SC455 handheld 1D scanner, to help you to use this product easily.

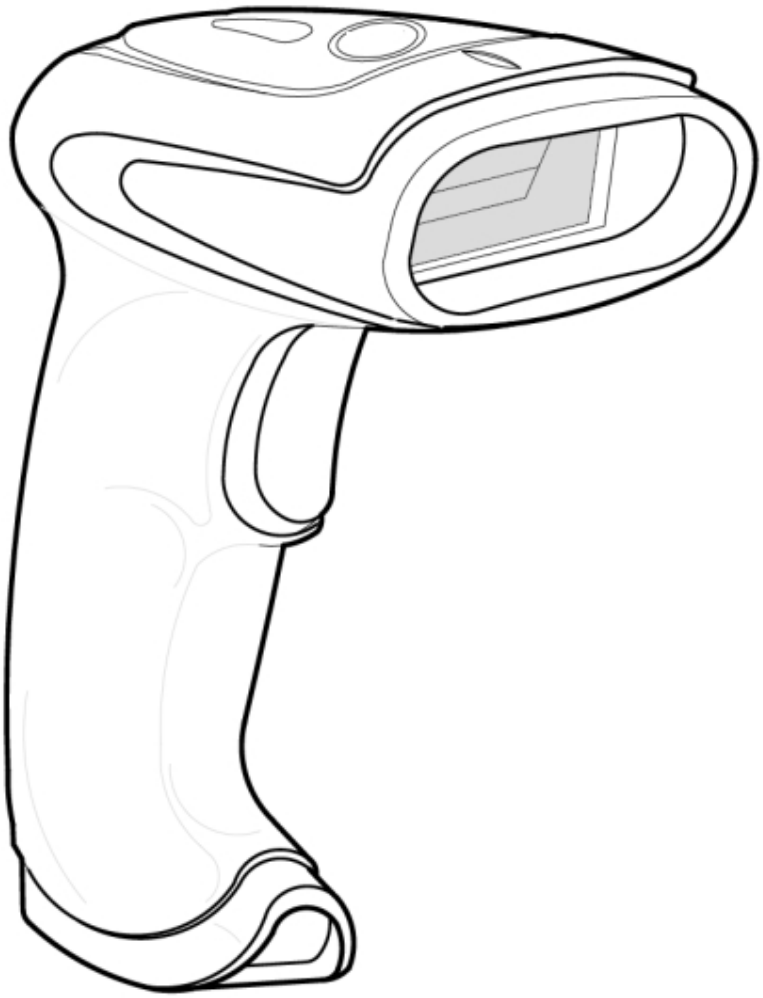

SC455

# Chapter 1 Getting Start

## 1.1 Receiver

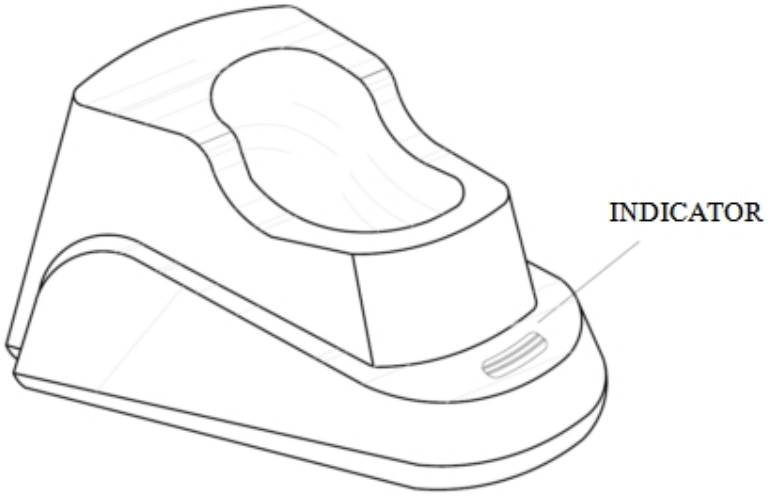


Picture 1.1 Receiver

## 1.2 Connect receiver

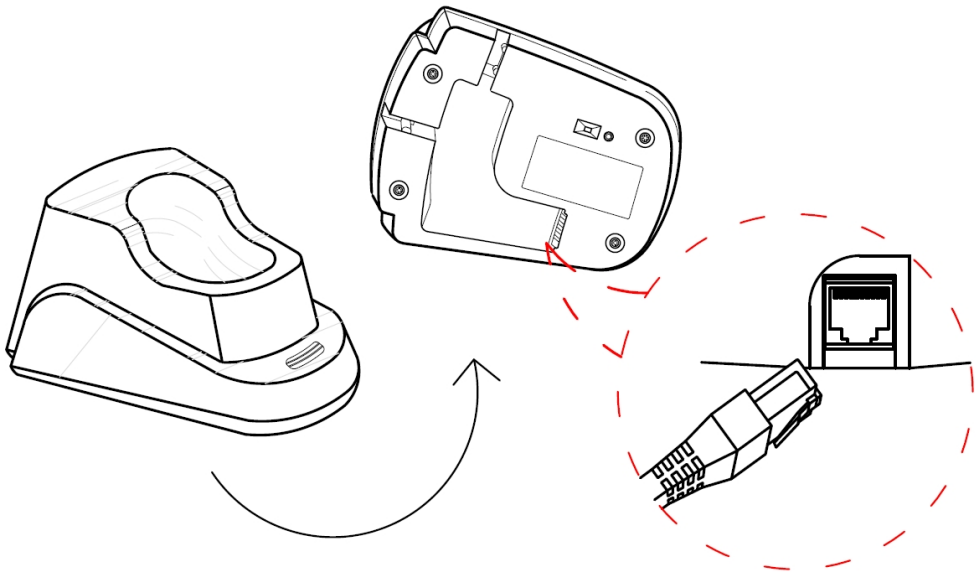

Picture 1.2 Connect receiver

## 1.3 Install cable

1.1. Insert the crestal end of the cable to the interface of the scanner
2. Gently pull on the cable to ensure that cable connections are secure

3. Connect the other end of the cable to PC.

Notice：Wireless scanner cable can be used for charging or transmission data

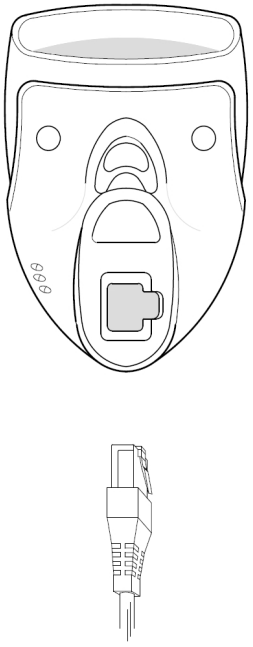

Picture1.3 Insert cable

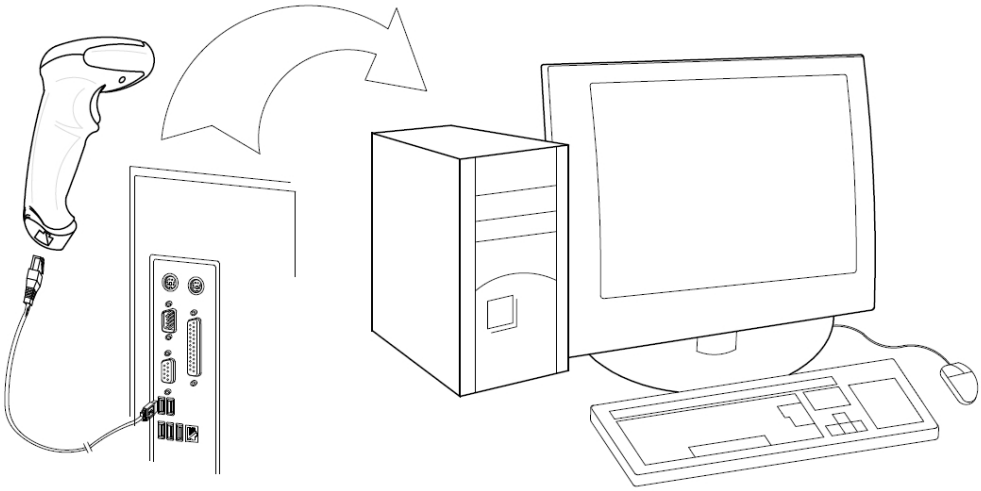

Picture 1.4 Connect the PC(For charging)

## 1.3 Scanner pairing

1. Conncetion cradle to terminal

2. Scanning the“Start Pairing”barcode within 20 seconds，when the receiver green light flashing and scanner red light flashing, means it is pairing situation.

Start pairing（@SET）

3.If connect successfully, there will have three warning sound and scanner flashing light turn red to green.

4.Finish pairing

# Chapter 2 scanning

## 2.1 Introduction

This chapter has covered the introduction of scanner appearance, the scanning method and scope, as well as two different operation ways.

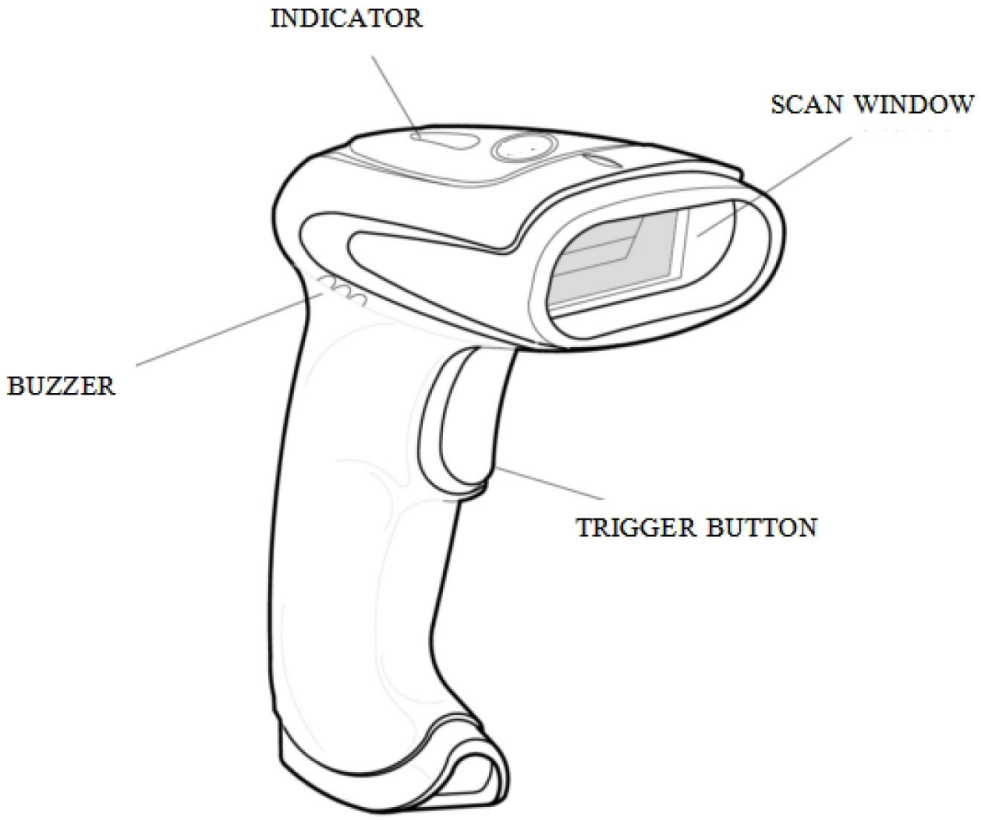

## 2.2 Handheld scan mode

Picture 2.1 Scan method

1.Make sure all connection is correct
2.Aim at the barcode, press the button
3.Barcode should be in range of LED light decoding area

## 2.3AIM

The red LED light bar is the window center of scanning area, please make sure

the barcode is in this area.

The below picture show the decode region and the blind region

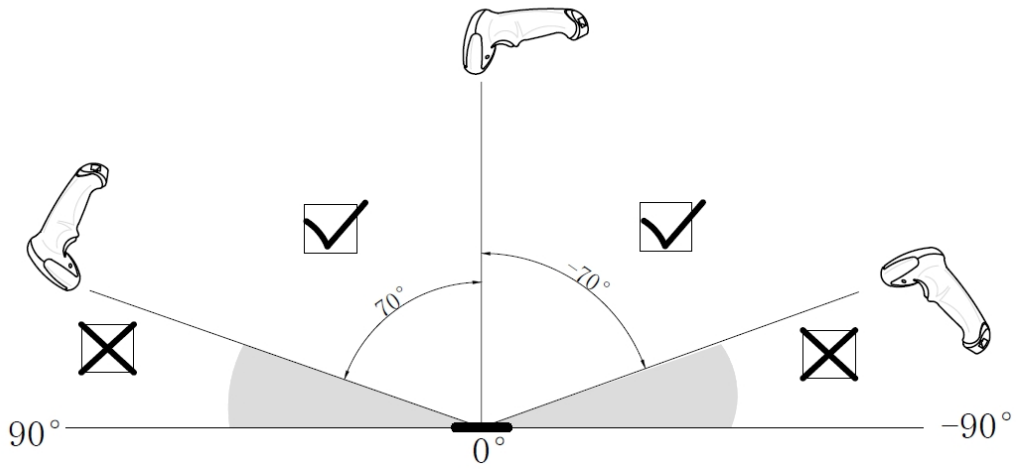


Picture2.2 Scan region

## 2.4 Dept of field

**1.**Dept of field

Picture 2.3 Dept of field

| Barcode | Resolution | Nearest | Fastest |
|---|---|---|---|
| Code39 | 5.0 mil | 60mm | 130mm |
| 100% UPCA | 13.0mil | 30mm | 300mm |
| Code 39 | 20.0mil | 35mm | 350mm |
| PDF 417 | 6.8mil | 40mm | 150mm |
| Data Matrix | 10.0mil | 50mm | 130mm |
| QR Code | 20.0mil | 25mm | 250mm |

**Test condition：**

Filter chosen：Standard mode

Barcode sample：photoelectricity test sample

wide and narrow ratio：2.5:1

Angle： $\alpha = 0° \beta = 15° \gamma = 0°$

Curvature： $R = \infty$

| Resolution | Barcode | Contrast | Blank area | Bit |
|---|---|---|---|---|
| 0.5mm | Code 39 | 0.9 | 18mm | 3 |
| 0.25mm | Code 39 | 0.9 | 10mm | 8 |
| 0.15mm | Code 39 | 0.9 | 7mm | 10 |

| | | | | |
|---|---|---|---|---|
| 0.127mm | Code 39 | 0.9 | 5mm | 4 |
| 0.08mm | Code 39 | 0.9 | 5mm | 4 |

**Chapter 3 Common function setting**

## Restore default setting

After scanned Restore default setting, scanner parameter will return to be factory stat.扫
Notice：After Restore default setting, need to scan barcode“9600”, or or it will come across Data disorder phenomenon

Restore default setting, 9600

### 3.1 Scan mode

Manual trigger mode：It can trigger the scanning by pressing the button or serial command to start this function. Under this mode, press the button until the decode successful or release the button; Under the serial command trigger mode, the scanning will till the decode successful or the scanner receive the stop scanning command.

*Manual trigger mode

Contious scan mode：**Scanner will continuously scan under this model.**

Contious scan mode

**Mobile phone mode 1：**Choose this mode when the mobile phone background light is weak or the reflection is strong.

**Mobile phone mode 1**

**Mobile phone mode 2：**Choose this mode when the mobile phone background light is strong and the reflection is strong.

**Mobile phone mode 2**

## 3.2 Image revere

*Open revere

*Close revere

## 3.3 Illumination

*Open Illumination

*Close Illumination

## 3.4 Barcode scanning delay

Under that function，scanner will delay to scan next barcode after successfully scanned previous barcode.

No delay

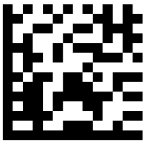

Delay 500 Milliseconds

Delay 2000 Milliseconds

# Chapter 4 Barcode Type Definition

## 4.1 Comman setting

Turn on all barcode

Turn off all barcode

## 4.2 1D barcode

### 4.2.1 Codabar

Restore Codabar default setting

*Turn on Codabar

Turn off Codabar

**Transmission Start/End symbol**

If Codabar barcode includes start and end symbol, scan below barcode, so that the start and end character will be transfer when the data transmission.

Transmission start/end symbol

*Not transfer start/end symbol

**Codabar Detection symbol**

To add the Detection symbol in Codabar is able to detect the legitimacy of the barcode by verifying.

NO Detection symbol

Detect but not transfer detect symbol

Detect and transfer detect symbol

**Effective length configuration**

Codabar barcode length is able to set Max, and Min, the data is valid to between Max and Min, and the data which over the Max or less then the Min is invalid. Use the Programming Command to finsh the setting.

For example: The valid barcode length of Codabar is Min10 and Max 25.

Programming Command as below：
Max：02020625
Min：02020510

### 4.2.2 Code 39

Default setting

*Turn on Code 39

*Turn off Code 39

**Start/End symbol**

If Code 39 barcode includes the start and end symbol, scan below barcode, so that you can choose if the start and end characters transfer at the same time.

*Transmission start/end symbol

*Not transmission start/end symbol

**Detection symbol**

Adding the detection symbol in Code 39 is able to detect the legitimacy of the barcode by verifying.

Add detective symbol in Code 39 to test the barcode validity.

*No detective symbol

Verify but not transfer detect symbol

Verify and transfer detect symbol

**Code 39 additional data**

It can add additional data behind Code 39 after turn it on.

Turn on addition

Turn off addition

**Code 39 Full ASCII**

*Turn on Code 39 Full ASCII

*Turn off Code 39 Full ASCII

**Effective length configuration**

Code 39 barcode length is able to set to Max, and Min, the data is valid between Max andMin, and the data which over the Max or less then the Min is invalid. Use the Programming Command to finsh the setting.
For example: The valid barcode length of Code39 is Min10 and Max 25.
Programming Command as below：
Max：02030825
Min：02030710

### 4.2.3 Code 128

Restore Code 128 default setting

*Turn on Code 128

Turn off Code 128

**Effective length configuration**
Code 128 barcode length is able to set to Max, and Min, the data is valid between Max andMin, and the data which over the Max or less then the Min is invalid. Use the Programming Command to finsh the setting.

For example: The valid barcode length of Code128 is Min10 and Max 25.

Programming Command as below：
Max：020A0325
Min：020A0210

### 4.2.4 Code 11

Default setting

*Turn Code 11

Turn off Code 11

**Detective character**

*1**detective character**

2 **detective characters**

**Effective length configuration**

Code 11 barcode length is able to set to Max, and Min, the data is valid between Max andMin, and the data which over the Max or less then the Min is invalid. Use the Programming Command to finsh the setting.

For example: The valid barcode length of Code11 is Min10 and Max 25.

Programming Command as below：

Max：02090325
Min：02090210

## 4.2.5 Code 93

Default setting

*Turn on Code 93

Turn off Code 93

**Effective length configuration**

Code 93barcode length is able to set to Max, and Min, the data is valid between Max andMin, and the data which over the Max or less then the Min is invalid. Use the Programming Command to finsh the setting.

For example: The valid barcode length of Code 93 is Min10 and Max 25.

Programming Command as below:

Max：020D0325
Min：020D0210

### 4.2.6 Interleaved 2 of 5

Default setting

*Turn on Interleaved 2 of 5

Turn off Interleaved 2 of 5

**Detect symbol**

To add the detection symbol in Interleaved 2 of 5 is able to detect the legitimacy of the barcode by verifying.

*No detect symbol

Verify but not transfer detect symbol

Verify and transfer detect symbol

**Effective length configuration**

Interleaved 2 of 5 barcode length is able to set to Max, and Min, the data is valid between Max andMin, and the data which over the Max or less then the Min is invalid. Use the Programming Command to finsh the setting.

For example: The valid barcode length of Interleaved 2 of 5 is Min10 and Max 25.

Programming Command as below:
Max：02040425
Min：02040310

### 4.2.7 Straight 2 of 5 Industrial

Default setting

*Turn on Straight 2 of 5 Industrial

Turn off Straight 2 of 5 Industrial

**Effective length configuration**

Straight 2 of 5 Industrial barcode length is able to set to Max,and Min,the data is valid between Max andMin, and the data which over the Max or less then the Min is invalid. Use the Programming Command to finsh the setting.
For example: The valid barcode length of Interleaved 2 of 5 is Min10 and Max 25.

Programming Command as below:

Max：02060325
Min：02060210

### 4.2.8 Matrix 2 of 5

Default setting

Turn on Matrix 2 of 5

*Turn off Matrix 2 of 5

**Effective length configuration**
Matrix 2 of 5 barcode length is able to set to Max,and Min,the data is valid between Max andMin, and the data which over the Max or less then the Min is invalid. Use the Programming Command to finsh the setting.

For example: The valid barcode length of Matrix 2 of 5 is Min10 and Max 25.

Programming Command as below：
Max：02080310
Min：0208025

### 4.2.9 UPC-A

Restore UPC-A default setting

*Turn on UPC-A

Turn off UPC-A

**Parity bit**

*With Parity bit

Without parity bit

**Digital system**

Turn on digital system

*Turn off digital system

**Addtional code**

Turn on 2 bits additional

*Turn off 2 bits additional

Turn on 5 bits additional

*Turn off 5 bits additional

**UPC-A Required**

Turn on the function of UPC-A Required, the scanner can only read the barcode with suffix.

Turn on UPC-A Required

*Turn off UPC-A Required

**UPC-A Addenda Separator**

Turn on

Turn off

### 4.2.10 UPC-E

Default setting

Turn on UPC-E0

Turn off UPC-E0

Turn on UPC- E1

Turn off UPC- E1

**UPC-E0Extension**

UPC-E0 can be extended to be 12 bytes UPC-A

Turn on UPC-E0 extension

Turn off UPC-E0 extension

**UPC-E0 parity bit**

Turn on UPC-E0 parity bit

Turn off UPC-E0 parity bit

**UPC-E0 Addenda Required**

Turn on UPC-E0 Addenda Required

Turn off UPC-E0 Addenda Required

**UPC-E0 Addenda Separator**

Turn on UPC-E0 Addenda Separator

Turn off UPC-E0 Addenda Separator

**UPC-E0 digital system**

Turn on

Turn off

**UPC-E0 Additional code**

Turn on 2 bits additional

Turn off 2 bits additional

Turn on 5 bits additional

Turn off 2 bits additional

## 4.2.11 EAN-8

Restore EAN-8 default setting

*Turn on EAN-8

Turn off EAN-8

**Transfer the parity bit**

The length of EAN-8 is 8 bits, the last bit is parity bit, it is to verify the accuracy of the data.

*Turn on transmission

Turn off transmission

**Add additional code**

Each EAN-8 code is able to add 2 bits or 5 bits additional code, in the sample of below, the part in blue dotted line is EAN-8 code, and which in red dotted line is additional code.

Turn on 2 bits additional code

*Turn off 2 bits additional code

Turn on 5 bits additional code

*Turn off 5 bits additional code

**Need to add additional code or not**

Need to add EAN-8 additional code

*Not need to add EAN-8 additional code

**EAN/JAN-8 additional space**

Turn on this function, there will be a space between the data and the additional data, if disable this function, there will be no space.

Turn on additional space

Turn off additional space

## 4.2.12 EAN-13

Restore EAN-13 Default setting

*Turn on EAN-13

Turn off EAN-13

**Transfer parity bit**

*Transfer EAN-13 detect bit

Not transfer EAN-13 detect bit

**Additional code**

Turn on 2 bits additional code

*Turn off 2 bits additional code

Turn on 5 bits additional code

*Turn off 2 bits additional code

**Need to add additional code or not**

Need to add EAN-13 additional code

*Not need to add EAN-13 additional code

### 4.2.13 MSI

Default setting

*Turn on MSI

Turn off MSI

**Effective length configuration**

MSI barcode length is able to set to Max, and Min,the data is valid between Max andMin, and the data which over the Max or less then the Min is invalid. Use the Programming Command to finsh the setting.

For example: The valid barcode length of MSI is Min5 and Max 10.

Programming Command as below：

Max：020E0410
Min：020E035

**MSI parity code**

ValidateType10Transmit

ValidateType10ThenType11CharTransmit

ValidateType10ThenType11CharNoTransmit

ValidateType10NoTransmit

Validate2Type10NoTransmit

Validate2Type10CharTransmit

Validate2Type10CharNoTransmit

DisableMSICheck

## 4.3 2Dbarcode

### 4.3.1 PDF417

Default setting

*Turn on PDF417

Turn off PDF417

PDF417 barcode length is able to set to Max, and Min, the data is valid between Max andMin, and the data which over the Max or less then the Min is invalid. Use the Programming Command to finsh the setting.

For example: The valid barcode length of PDF417 is Min5 and Max 10.

Programming Command as below:
Max：021F0610
Min：021F055

### 4.3.2 Micro PDF417

Turn on Micro PDF417

Turn off Micro PDF417

Micro PDF417 barcode length is able to set to Max, and Min, the data is valid between Max andMin, and the data which over the Max or less then the Min is invalid. Use the Programming Command to finsh the setting.

For example: The valid barcode length of Micro PDF417 is Min5 and Max 10.
Programming Command as below:
Max：02200310
Min：0220025

### 4.3.3 QR Code

Default setting

*Turn on QR Code

Turn off QR Code

**Effective length configuration**
QR Code barcode length is able to set to Max,and Min,the data is valid between Max andMin, and the data which over the Max or less then the Min is invalid. Use the Programming Command to finsh the setting.

For example: The valid barcode length of QR Code is Min5 and Max 10.
Programming Command as below:
Max：02370310
Min：0237025

### 4.3.4 Data Matrix

Default setting

*Turn on Data Matrix

Turn off Data Matrix

**Effective length configuration**

Data Matrix barcode length is able to set to Max,and Min,the data is valid between Max andMin, and the data which over the Max or less then the Min is invalid. Use the Programming Command to finsh the setting.

For example: The valid barcode length of Data Matrix is Min5 and Max 10.
Programming Command as below:
Max：02360310
Min：0236025

## 4.3.5 Maxicode

Default setting

Turn on Maxicode

Turn off Maxicode

**Effective length configuration**

Maxicode barcode length is able to set to Max,and Min,the data is valid between Max andMin, and the data which over the Max or less then the Min is invalid. Use the Programming Command to finsh the setting.

For example: The valid barcode length of Maxicode is Min5 and Max 10.
Programming Command as below:
Max：02360310
Min：0236025

## 4.3.6 Aztec

Default setting

Turn on Aztec

Turn off Aztec

**Effective length configuration**
Aztec barcode length is able to set to Max,and Min,the data is valid between Max andMin, and the data which over the Max or less then the Min is invalid. Use the Programming Command to finsh the setting.

For example: The valid barcode length of Aztec is Min5 and Max 10.
Programming Command as below:
Max：02330610
Min：0233055

## 4.3.7 Chinese sensible code

Default setting

Turn on Chinese sensible code

Turn off Chinese sensible code

**Effective length configuration**

Chinese sensible barcode length is able to set to Max,and Min,the data is valid between Max andMin, and the data which over the Max or less then the Min is invalid. Use the Programming Command to finsh the setting.

For example: The valid barcode length of Chinese sensible code is Min5 and Max 10. Programming Command as below:

Max：02380310

Min：0238025

## Appendix 2: Digital barcode

0

1

2

3

4

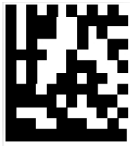

5

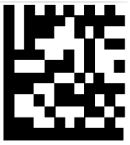

6

7

8

9

A

B

C

D

E

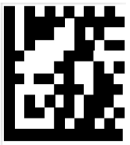
F

## Appendix 3：Default setting

| Parameter | Default |
|---|---|
| **Code system** | |
| Reverse image | Turn off |
| **Code 128** | |
| Code 128 | Turn on |
| Max length | 127 |
| Min length | 1 |
| **EAN-8** | |
| EAN-8 | Turn on |
| Parity bit | Transmit |
| 2 bits additional code | Turn off |
| 5 bits additional code | Turn off |
| Additional code | Not needed |
| Expand to EAN-13 code | Turn off |
| **UPC-E** | |
| UPC-E | Turn on |
| Parity bit | Transmit |
| 2 bits additional code | Turn off |
| 5 bits additional code | Turn off |
| Additional code | Not needed |
| Expand to UPC-A | Turn off |
| System symbol “0” | Not transmit |

| Parameter | Default |
|---|---|
| **UPC-A** | |
| UPC-A | Turn on |
| Parity bit | Transmit |
| 2 bits additional code | Turn off |
| 5 bits additional code | Turn off |
| Additional code | Not needed |
| Leading symbol”0” | Not transmit |
| **Interleaved 2 of 5** | |
| Interleaved 2 of 5 | Turn on |
| Parity bit | Not transmit |
| Max length | 100 |
| Min length | 6 |
| **Matrix 2 of 5** | |
| Matrix 2 of 5 | Turn off |
| Max length | 127 |
| Min length | 6 |
| **Straight 2 of 5 Industrial** | |
| Matrix 2 of 5 | Turn off |
| Max length | 127 |
| Min length | 6 |
| **Code 39** | |
| Code 39 | Turn on |
| Start/End symbol | Transmit |
| Code 39 Full ASCII | Turn on |
| Max length | 127 |
| Min length | 4 |

| Parameter | Default |
|---|---|
| **Codabar** | |
| Codabar | Turn on |
| Start/End symbol | Not transmit |
| Max length | 127 |
| Min length | 1 |
| **Code 93** | |
| Code 93 | Turn on |
| Max length | 127 |
| Min length | 3 |
| **Code 11** | |
| Code 11 | Turn on |
| Parity bit | Not transmit |
| Max length | 127 |
| Min length | 2 |
| **PDF 417** | |
| PDF 417 | Turn on |
| Max length | 2710 |
| Min length | 1 |
| **QR Code** | |
| QR Code | Turn on |
| Max length | 7089 |
| Min length | 1 |
| **Data Matrix** | |
| Data Matrix | Turn on |
| Max length | 3116 |
| Min length | 1 |

| Parameter | Default |
|---|---|
| **MSI** | |
| MSI | Turn on |
| Max length | 127 |
| Min length | 2 |

# Chapter 5 Wireless configuration

## 5.1 Transmitting terminal

### 5.1.1 Enter setting & Save&exit

| | | |
|---|---|---|
| **Enter setting** | @SET | |
| **Save&Exit** | @END | |

Notice: 1. Except quick setting instruction, other settings need to scan Enter Setting code first, then scan function code, and scan **Save&Exit code.**

2. **If under setting situation, scanner scan non-setting code, it will make a sound for warning. No warning means normal.**
3. **Quick setting instruction can scan function barcode directly.**

### 5.1.2 Start pairing

| | | |
|---|---|---|
| **Start pairing** | | |
| **Remove pairing** | | |

Notice:

Start pairing: After the receiver has power, please pair within 20 seconds(LED light is flashing). After 20seconds, LED light will be normally on and cannot pair.

## 5.1.3 Setting interface

| | | |
|---|---|---|
| **Enter setting** | @SET | |
| *USB output | | |
| **Virtual COM Port output** | | |
| **Save&Exit** | @END | |

**Notice:**
**When need to change USB and Virtual COM Port, please scan the setting barcode, and do not plug the receiver**

## 5.1.4 Wired output setting

| | | |
|---|---|---|
| **Enter setting** | @SET | |
| *Turn on USB wired output | | |
| Turn off USB wired output | | |
| **Save&Exit** | @END | |

## 5.1.4 HID keyboard language

| **Enter setting** | @SET | |
|---|---|---|
| American English | | |
| France | | |
| German | | |
| Turkish | | |
| French (Belgian) | | |
| Brazil | | |

| | | |
|---|---|---|
| **Czech** | | |
| **Spanish(Latin America)** | | |
| **Save&Exit** | @END | |

Notice:

That setting barcode is valid to Tx and Rx.If set multiple languages under the condition of wireless connection is broken, it will come the Rx language successfully set, but the Tx fails.

5.1.5 Check parameter

| | | |
|---|---|---|
| **Enter setting** | @SET | |
| **Check system parameter** | | |
| **Save&Exit** | @END | |

Notice:

Checking parameter command send to receive together with system parameter, each parameter separated by End symbol, as PKT{Protocol character|Parameter1+0x0D|arameter2+0x0D |……}（{}SDK contend inside）

### 5.1.10 Operation mode

| | | |
|---|---|---|
| *Real time mode | | |
| Cache mode | | |
| Inventory mode | | |

**Notice 1:**

**Real time mode:** Upload data immediately after scanning, if upload fail, data will lose automatically.

**Cache mode：** It work the same as real time mode if connection normal,but if the cradle out of power, and connect the power again, under the Cache mode, the data which are stored when the power off will keep uploading.

**Inventory mode:** Scan the barcode, not upload immediately, store automatically, all data will upload after scan “Upload data”barcode, and it will clear all data after scan “Clear data”, or check the data amount after scan “Data amount” barcode.

**Notice 2:**

The above three barcodes are quick commands, it will enter and save setting after scanning. The storage is 10,000 pcs 13Byte barcodes in inventory mode, 30,000 pcs 13Byte barcodes in cache mode.

### 5.1.11 Inventory mode operation setting

| | | |
|---|---|---|
| Upload data | | |
| Data amount | | |
| Clear data | | |

**Notice: The above three barcodes are quick commands, it will enter and save setting after scanning.**

### 5.1.12 Sleep time setting

| | | |
|---|---|---|
| **Enter setting** | @SET | |
| ***20s** | | |
| 60s | | |
| 3mins | | |
| 5mins | | |
| 15mins | | |
| 30mins | | |
| None sleep mode | | |
| **Save&Exit** | @END | |

### 5.1.13 Initialization

| | | |
|---|---|---|
| **Enter setting** | @SET | |
| Restore wireless default setting | | |

| | | |
|---|---|---|
| **Save&Exit** | @END | |

**Notice:**
**Restore wireless defaul setting:** Restore default interface, lanaguage, operation mode, sleep time, wired output switch.

### 5.2.1 Set prefix

| | | |
|---|---|---|
| **Enter setting** | @SET | |
| ***Disable prefix** | | |
| **User-defined prefix barcode** | | |
| **Save&Exit** | @END | |

**Example:** Sets the prefix of the barcode "1234567" to "#Ab9", namely the output barcode is "#Ab91234567".

**1.** Scan "**Enter setting" barcode**
**2.** Scan **"User-defined prefix + barcode**" barcode
**3.** Scan **"#", "A", "B", "9" Barcode one by one.**
**4.** Scan **"Save&Exit"**

### 5.2.2 Set suffix

| | | |
|---|---|---|
| **Enter setting** | @SET | |
| Disable **suffix** | | |
| ***User-defined prefix barcode** | | |
| **Save&Exit** | @END | |

1. System factory default End symbol: 0x0D(Enter)
2.Common End symbol 0x0D(Enter), 0x0A(换行), 0x09(Tab)

**Example:** Sets the suffix of the barcode "1234567" to "%B", namely the output

barcode is “1234567%B”.

1. Scan “**Enter setting” barcode**
2. Scan **“User-defined suffix + barcode**” barcode
3. Scan **“%”, “B” barcode one by one.**
4. Scan **“Save&Exit”**
5. System factory default End symbol: 0x0D(Enter)
6. Common End symbol 0x0D(Enter), 0x0A(换行), 0x09(Tab)

Notice:

| | | |
|---|---|---|
| 0x0D(Enter) | 0x0A(Line feed) | 0x09(Tab) |

### 5.2.3 Notify sound system

| Function | Command | Barcode | Remark |
|---|---|---|---|
| | @SET | | |
| | | | |
| Turn on the base Sound | @.WN-R-F5003/ | | |
| | | | |
| Turn off the base Sound | @.WN-R-F5004/ | | |
| | | | |
| | @END | | |

| | | |
|---|---|---|
| Turn on the Scanner Sound | | |
| Turn off the Scanner Sound | | |

### 5.2.4 Instruction system

| Item | Status notice types | Sound notice types | LED light status |
|---|---|---|---|
| **Normal boot detection instruction** | | | |
| 1 | **Wireless mode abnormal detection** | Three short beeps(High frequency) | Red light flashes thrice |
| 2 | **external storage module abnormal** | Two long beeps(High frequency) | Red light flashes twice |

| | | | |
|---|---|---|---|
| | **detection** | | |
| 3 | **Normal boot** | Four short beeps(High, middle,low frequency) | Green light Normally on |
| **Pairing status instruction** | | | |
| 4 | **Turn on wireless pairing** | One short beeps(High frequency) | LED light flashes once |
| 5 | **wireless pairing status** | None | LED light flashes |
| 6 | **Wireless pairing failure** | None | Red light Normally on, green light off |
| 7 | **Wireless pairing success** | Three long beeps(High, middle, low frequency), big difference | Green light Normally on |
| **Setting situation Instruction** | | | |
| 8 | **Enter setting** | One long and two short beeps(High, middle, low frequency) | Green light flashes once |
| 9 | **Exit** | One long and two short beeps(High, middle, low frequency) | Green light flashes once |
| 10 | **Setting command status time** | One long and one short beeps(High, low frequency) | Green light Normally on |
| 11 | **Effective command** | One long and two short beeps(High, middle, low frequency) | Green light flashes once |
| 12 | **Noneffective command** | One long beep(low frequency) | Green and red light flashes once both |
| **Inventory mode indication** | | | |
| 13 | **Data upload success** | One short beep(High frequency) | Green light flashes once |
| 14 | **Data upload failure** | Three short beeps(Middle frequency)） | Red light flashes thrice |
| 15 | **Inventory mode storage full** | Two long beeps(High frequency)) | Red light flashes twice |
| **Real time mode status Instruction** | | | |

| | | | |
|---|---|---|---|
| 17 | **Data upload success** | One short beep(High frequency) | Green light flashes once |
| 18 | **Data upload failure** | Three short beeps(Middle frequency)） | Red light flashes thrice |
| Battery status Instruction | | | |
| 20 | **Charging status** | None | Blue light turn on |
| 21 | **Charging completed** | None | Blue light turn off, green light on |
| 22 | **Sleep/power off** | One long beep(low frequency) | Light off |
| 23 | **Low Battery indication** | None | Red light on(Won't influence green light) |
| **Quick command Instruction** | | | |
| 24 | Quick command | One long and two short beeps(High, middle, low frequency) | Green light flashes once |
| **Data overflow** | | | |
| 25 | **Data overflow** | One long beep(low frequency) | Red light flashes once |

**Receiver LED light Instruction**

| Item | System status | Sound warning | Indicator status |
|---|---|---|---|
| 2.4G & 433USB portable receiver | | | |
| 1 | Power on within 30 seconds | --- | Green light flashes slowly |
| 2 | After power on 30 seconds | --- | Green light Normally on |
| 3 | Received SDK | --- | Green light flashes once |

# Appendix

## Appendix 1: Character

| Control character | Hex | |
|---|---|---|
| ^@（NULL） | 00 | |
| ^A（SOH） | 01 | |
| ^B（STX） | 02 | |
| ^C（ETX） | 03 | |

| | | |
|---|---|---|
| ^D（EOT） | 04 | |
| ^E（ENQ） | 05 | |
| ^F（ACK） | 06 | |
| ^G（BEL） | 07 | |
| ^H（BS） | 08 | |
| ^I（HTab） | 09 | |
| ^J（LF） | 0A | |
| ^K（VTab） | 0B | |
| ^L（FF） | 0C | |
| ^M（CR） | 0D | |
| ^N（SO） | 0E | |
| ^O（SI） | 0F | |
| ^P（DLE） | 10 | |
| ^Q（DC1） | 11 | |
| ^R（DC2） | 12 | |
| ^S（DC3） | 13 | |
| ^T（DC4） | 14 | |
| ^U（NAK） | 15 | |
| ^V（SYN） | 16 | |
| ^W（ETB） | 17 | |

| | | |
|---|---|---|
| ^X（CAN） | 18 | |
| ^Y（EM） | 19 | |
| ^Z（SUB） | 1A | |
| ^[（ESC） | 1B | |
| ^\（FS） | 1C | |
| ^]（GS） | 1D | |
| ^^（RS） | 1E | |
| ^_（US） | 1F | |
| SPC | 20 | |
| | | |
| **Character** | **Hex** | |
| ! | 21 | |
| " | 22 | |
| # | 23 | |
| $ | 24 | |
| % | 25 | |
| & | 26 | |
| ' | 27 | |
| ( | 28 | |
| ) | 29 | |

| | | |
|---|---|---|
| * | 2A | |
| + | 2B | |
| , | 2C | |
| - | 2D | |
| . | 2E | |
| / | 2F | |
| 0 | 30 | |
| 1 | 31 | |
| 2 | 32 | |
| 3 | 33 | |
| 4 | 34 | |
| 5 | 35 | |
| 6 | 36 | |
| 7 | 37 | |
| 8 | 38 | |
| 9 | 39 | |
| : | 3A | |
| ; | 3B | |
| < | 3C | |
| = | 3D | |

| | | |
|---|---|---|
| > | 3E | |
| ? | 3F | |
| @ | 40 | |
| A | 41 | |
| B | 42 | |
| C | 43 | |
| D | 44 | |
| E | 45 | |
| F | 46 | |
| G | 47 | |
| H | 48 | |
| I | 49 | |
| J | 4A | |
| K | 4B | |
| L | 4C | |
| M | 4D | |
| N | 4E | |
| O | 4F | |
| P | 50 | |
| Q | 51 | |

| | | |
|---|---|---|
| R | 52 | |
| S | 53 | |
| T | 54 | |
| U | 55 | |
| V | 56 | |
| W | 57 | |
| X | 58 | |
| Y | 59 | |
| Z | 5A | |
| [ | 5B | |
| \ | 5C | |
| ] | 5D | |
| ^ | 5E | |
| _ | 5F | |
| ` | 60 | |
| a | 61 | |
| b | 62 | |
| c | 63 | |
| d | 64 | |
| e | 65 | |

| | | |
|---|---|---|
| f | 66 | |
| g | 67 | |
| h | 68 | |
| i | 69 | |
| j | 6A | |
| k | 6B | |
| l | 6C | |
| m | 6D | |
| n | 6E | |
| o | 6F | |
| p | 70 | |
| q | 71 | |
| r | 72 | |
| s | 73 | |
| t | 74 | |
| u | 75 | |
| v | 76 | |
| w | 77 | |
| x | 78 | |
| Y | 79 | |

| | | |
|---|---|---|
| z | 7A | |
| { | 7B | |
| \| | 7C | |
| } | 7D | |
| ~ | 7E | |
| DEL | 7F | |
| | | |
| **Keyboard keys** | **Hex** | |
| F1 | 80 | |
| F2 | 81 | |
| F3 | 82 | |
| F4 | 83 | |
| F5 | 84 | |
| F6 | 85 | |
| F7 | 86 | |
| F8 | 87 | |
| F9 | 88 | |
| F10 | 89 | |
| F11 | 8A | |
| F12 | 8B | |

| | | |
|---|---|---|
| Backspace | 8C | |
| Tab | 8D | |
| Return（ENTER） | 8E | |
| Enter（Numeric Keypad） | 8F | |
| Esc | 90 | |
| Arrow Down | 91 | |
| Arrow up | 92 | |
| Arrow right | 93 | |
| Arrow left | 94 | |
| Insert | 95 | |
| Home | 96 | |
| End | 97 | |
| Page up | 98 | |
| Page down | 99 | |
| Left Shift | 9A | |
| Left Ctrl | 9B | |
| Left Alt | 9C | |
| Left GUI | 9D | |
| Right Shift | 9E | |
| Right Ctrl | 9F | |

| | | |
|---|---|---|
| Right Alt | A0 | |
| Right GUI | A1 | |
| Caps Lock | A2 | |

## Appendix 2：ASCII barcode list

| Decimal | Octal | Hexadecima | Character | Description |
|---|---|---|---|---|
| 0 | 0 | 00 | NUL | |
| 1 | 1 | 01 | SOH | start of header |
| 2 | 2 | 02 | STX | start of text |
| 3 | 3 | 03 | ETX | end of text |
| 4 | 4 | 04 | EOT | end of transmission |
| 5 | 5 | 05 | ENQ | enquiry |
| 6 | 6 | 06 | ACK | acknowledge |
| 7 | 7 | 07 | BEL | bell |
| 8 | 10 | 08 | BS | backspace |
| 9 | 11 | 09 | HT | horizontal tab |
| 10 | 12 | 0A | LF | line feed |
| 11 | 13 | 0B | VT | vertical tab |
| 12 | 14 | 0C | FF | form feed |
| 13 | 15 | 0D | CR | carriage return |
| 14 | 16 | 0E | SO | shift out |
| 15 | 17 | 0F | SI | shift in |
| 16 | 20 | 10 | DLE | data link escape |
| 17 | 21 | 11 | DC1 | no assignment，but usually XON |
| 18 | 22 | 12 | DC2 | |
| 19 | 23 | 13 | DC3 | no assignment，but usually XOFF |
| 20 | 24 | 14 | DC4 | |
| 21 | 25 | 15 | NAK | negative acknowledge |
| 22 | 26 | 16 | SYN | synchronous idle |
| 23 | 27 | 17 | ETB | end of transmission block |
| 24 | 30 | 18 | CAN | cancel |
| 25 | 31 | 19 | EM | end of medium |
| 26 | 32 | 1A | SUB | substitute |
| 27 | 33 | 1B | ESC | escape |
| 28 | 34 | 1C | FS | file separator |

| Decimal | Octal | Hexadecima | Character | Description |
|---|---|---|---|---|
| 29 | 35 | 1D | GS | group separator |
| 30 | 36 | 1E | RS | record separator |
| 31 | 37 | 1F | US | unit separator |
| 32 | 40 | 20 | SPC | space |
| 33 | 41 | 21 | ! | |
| 34 | 42 | 22 | ″ | |
| 35 | 43 | 23 | # | |
| 36 | 44 | 24 | $ | |
| 37 | 45 | 25 | % | |
| 38 | 46 | 26 | & | |
| 39 | 47 | 27 | ’ | |
| 40 | 50 | 28 | ( | |
| 41 | 51 | 29 | ) | |
| 42 | 52 | 2A | * | |
| 43 | 53 | 2B | + | |
| 44 | 54 | 2C | , | |
| 45 | 55 | 2D | − | |
| 46 | 56 | 2E | . | |
| 47 | 57 | 2F | / | |
| 48 | 60 | 30 | 0 | |
| 49 | 61 | 31 | 1 | |
| 50 | 62 | 32 | 2 | |
| 51 | 63 | 33 | 3 | |
| 52 | 64 | 34 | 4 | |
| 53 | 65 | 35 | 5 | |
| 54 | 66 | 36 | 6 | |
| 55 | 67 | 37 | 7 | |
| 56 | 70 | 38 | 8 | |
| 57 | 71 | 39 | 9 | |
| 58 | 72 | 3A | : | |
| 59 | 73 | 3B | ; | |
| 60 | 74 | 3C | < | |
| 61 | 75 | 3D | = | |
| 62 | 76 | 3E | > | |
| 63 | 77 | 3F | ? | |
| 64 | 100 | 40 | @ | |
| 65 | 101 | 41 | A | |
| 66 | 102 | 42 | B | |

| Decimal | Octal | Hexadecima | Character | Description |
|---|---|---|---|---|
| 67 | 103 | 43 | C | |
| 68 | 104 | 44 | D | |
| 69 | 105 | 45 | E | |
| 70 | 106 | 46 | F | |
| 71 | 107 | 47 | G | |
| 72 | 110 | 48 | H | |
| 73 | 111 | 49 | I | |
| 74 | 112 | 4A | J | |
| 75 | 113 | 4B | K | |
| 76 | 114 | 4C | L | |
| 77 | 115 | 4D | M | |
| 78 | 116 | 4E | N | |
| 79 | 117 | 4F | O | |
| 80 | 120 | 50 | P | |
| 81 | 121 | 51 | Q | |
| 82 | 122 | 52 | R | |
| 83 | 123 | 53 | S | |
| 84 | 124 | 54 | T | |
| 85 | 125 | 55 | U | |
| 86 | 126 | 56 | V | |
| 87 | 127 | 57 | W | |
| 88 | 130 | 58 | X | |
| 89 | 131 | 59 | Y | |
| 90 | 132 | 5A | Z | |
| 91 | 133 | 5B | [ | |
| 92 | 134 | 5C | \ | |
| 93 | 135 | 5D | ] | |
| 94 | 136 | 5E | ^ | |
| 95 | 137 | 5F | _ | |
| 96 | 140 | 60 | ` | |
| 97 | 141 | 61 | a | |
| 98 | 142 | 62 | b | |
| 99 | 143 | 63 | c | |
| 100 | 144 | 64 | d | |
| 101 | 145 | 65 | e | |
| 102 | 146 | 66 | f | |
| 103 | 147 | 67 | g | |
| 104 | 150 | 68 | h | |

| Decimal | Octal | Hexadecima | Character | Description |
|---|---|---|---|---|
| 105 | 151 | 69 | i | |
| 106 | 152 | 6A | j | |
| 107 | 153 | 6B | k | |
| 108 | 154 | 6C | l | |
| 109 | 155 | 6D | m | |
| 110 | 156 | 6E | n | |
| 111 | 157 | 6F | o | |
| 112 | 160 | 70 | p | |
| 113 | 161 | 71 | q | |
| 114 | 162 | 72 | r | |
| 115 | 163 | 73 | s | |
| 116 | 164 | 74 | t | |
| 117 | 165 | 75 | u | |
| 118 | 166 | 76 | v | |
| 119 | 167 | 77 | w | |
| 120 | 170 | 78 | x | |
| 121 | 171 | 79 | y | |
| 122 | 172 | 7A | z | |
| 123 | 173 | 7B | { | |
| 124 | 174 | 7C | \| | |
| 125 | 175 | 7D | } | |
| 126 | 176 | 7E | ~ | |
| 127 | 177 | 7F | DEL | delete |
| 128 | 200 | 80 | F1 | |
| 129 | 201 | 81 | F2 | |
| 130 | 202 | 82 | F3 | |
| 131 | 203 | 83 | F4 | |
| 132 | 204 | 84 | F5 | |
| 133 | 205 | 85 | F6 | |
| 134 | 206 | 86 | F7 | |
| 135 | 207 | 87 | F8 | |
| 136 | 210 | 88 | F9 | |
| 137 | 211 | 89 | F10 | |
| 138 | 212 | 8A | F11 | |
| 139 | 213 | 8B | F12 | |
| 140 | 214 | 8C | Backspace | |
| 141 | 215 | 8D | Tab | |
| 142 | 216 | 8E | Return | |

| Decimal | Octal | Hexadecima | Character | Description |
|---|---|---|---|---|
| 143 | 217 | 8F | Enter | |
| 144 | 220 | 90 | Esc | |
| 145 | 221 | 91 | Arrow Down | |
| 146 | 222 | 92 | Arrow up | |
| 147 | 223 | 93 | Arrow right | |
| 148 | 224 | 94 | Arrow left | |
| 149 | 225 | 95 | Insert | |
| 150 | 226 | 96 | Home | |
| 151 | 227 | 97 | End | |
| 152 | 230 | 98 | Page up | |
| 153 | 231 | 99 | Page down | |
| 154 | 232 | 9A | Left Shift | |
| 155 | 233 | 9B | Left Ctrl | |
| 156 | 234 | 9C | Left Alt | |
| 157 | 235 | 9D | Left GUI | |
| 158 | 236 | 9E | Right Shift | |
| 159 | 237 | 9F | Right Ctrl | |
| 160 | 240 | A0 | Right Alt | |
| 161 | 241 | A1 | Right GUI | |
| 162 | 242 | A2 | Caps Lock | |

## Appendix 3: Example codes

EAN13

UPC-A

EAN8

UPC-E

Default data: 1234565

Codabar

Encoded data: c01235d

Code 93

Code 39(Regular)

Code 39(Full ASCII)

Encoded data: *Code 39*

GS1 Databar

Encoded data: 65473728281919